# 深圳市金逸晨电子有限公司

## ShenZhen GoldenMorning Electronic Co.,Ltd

## PRODUCT SPECIFICATION

| | |
|---|---|
| **Model No** | **TB071-01-08-B** |
| **Product Name** | **0.71 TFT LCD Module** |
| **Version** | **V1.0** |
| **Date** | **2024-10-23** |

☐ Preliminary Specification
☑ Final Specification

| PREPARED BY | CHECKED BY | APPROVED BY |
|---|---|---|
| | | |

## Revision History

| Version | Date | Page | Revise record | Remarks |
|---|---|---|---|---|
| V1.0 | 2024.10.23 | - | First issued | - |
| | | | | |
| | | | | |
| | | | | |
| | | | | |
| | | | | |
| | | | | |
| | | | | |
| | | | | |
| | | | | |
| | | | | |
| | | | | |

# TABLE OF CONTENT

**NO.Contents** **Page**

1. General Parameter .....4
2. Physical drawing .....4
3. Mechanical Dimension .....5
4. Absolute Maximum Ratings .....6
5. DC Characteristics .....6
6. Backlight Characteristic .....6
7. Pins Definitions. .....7
8. Schematic Diagram .....7
9. Timing Characteristics .....8
10. Optical Characteristics .....9
11. Reliability .....10
12. Precautions .....11

## 1. General Parameter

| NO. | Features | Details | Unit |
|---|---|---|---|
| 1 | Display Size(Diagonal) | 0.71” | Inch |
| 2 | LCD type | IPS TFT | - |
| 3 | Display Mode | Normally black | - |
| 4 | Resolution | 160 RGB(H) x 160(V) | Pixels |
| 5 | Viewing Direction | ALL | - |
| 6 | Module size | 21.26(W) x27.3(H) x 5.6(T) | mm |
| 7 | Active Area | 18.0(W) x 18.0(H) | mm |
| 8 | Dot pitch | 37.5 (H) x 112.5(V) | um |
| 9 | Color arrangement | RGB Vtertical stripe | - |
| 10 | Interface | 4 Wire SPI | - |
| 11 | Display Colors | 262K | - |
| 12 | Driver IC | GC9D01 | - |
| 13 | With or Without Touch Panel | Without | - |
| 14 | Operating Temperature | -20℃~70℃ | ℃ |
| 15 | Storage Temperature | -30℃~80℃ | ℃ |
| 16 | Weight | - | g |

Note 1: Please refer to the mechanical drawing.

## 2. Physical drawing

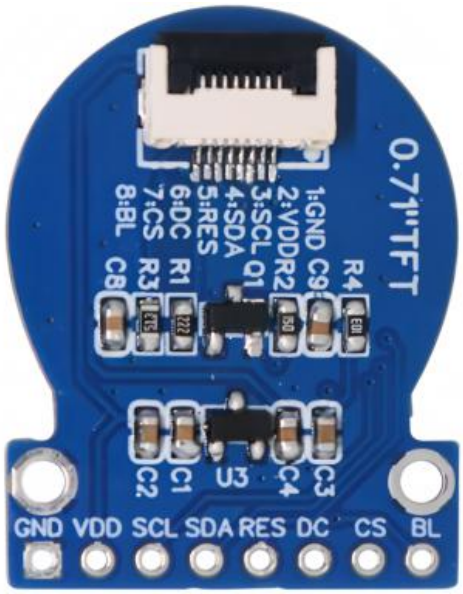

## 3. Mechanical Dimension

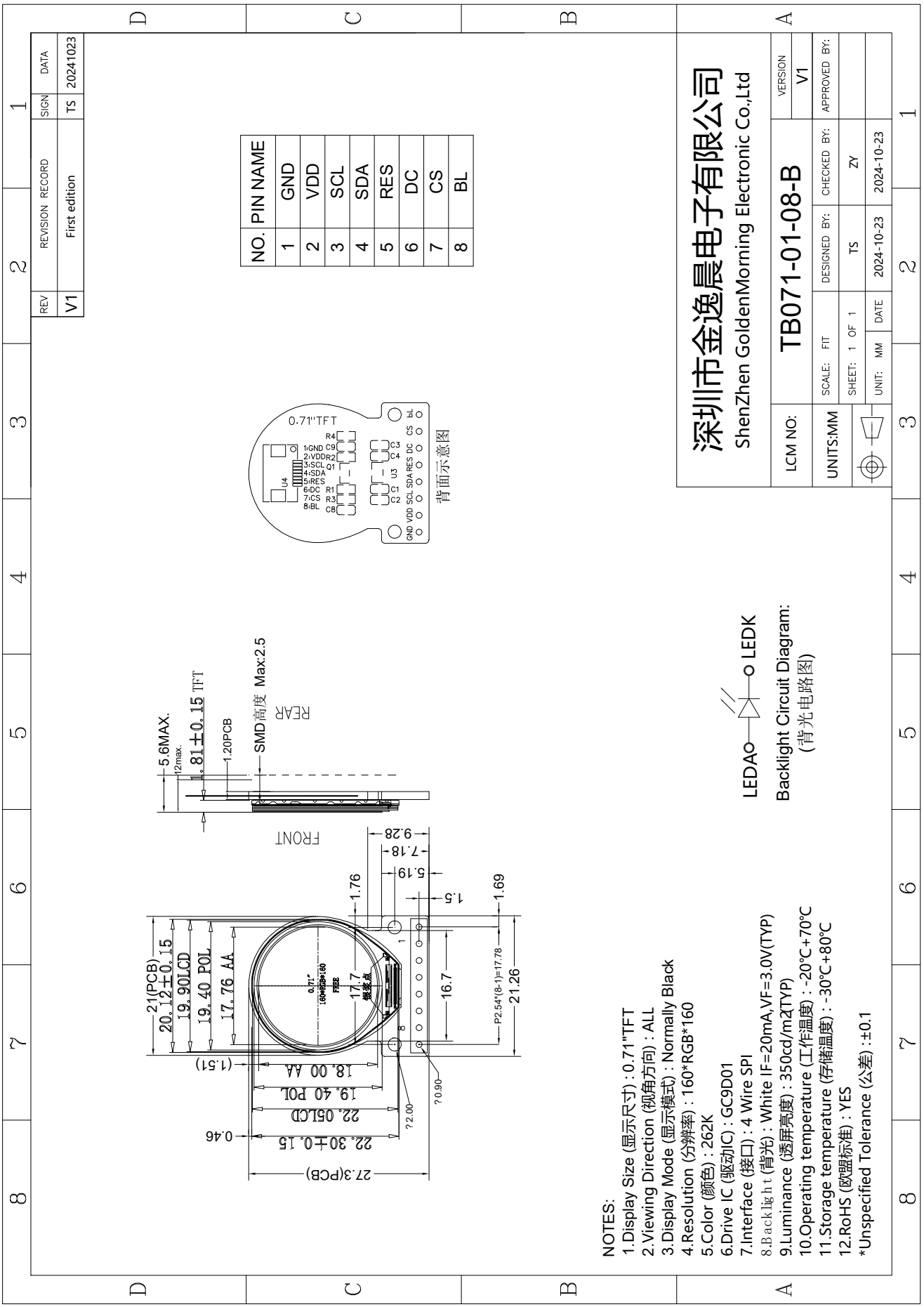

## 4. Asolute Maximum Ratings

| Item | Symbol | Min. | Max. | Unit |
|---|---|---|---|---|
| Logic Supply Voltage | IOVCC | -0.3 | 4.6 | V |
| Analog Supply Voltage | VCC | -0.3 | 4.6 | V |
| Operating temperature | Top | -20 | 70 | ℃ |
| Storage temperature | Tst | -30 | 80 | ℃ |

Note 1: If tAmbient temperature below 50ºC, the maximal humidity is 90%RH, if Ambient temperature over 50ºC, absolute humidity should be less than 60%RH.

Note 2: The response time will be extremely slow when the operating temperature is around -10℃, and the back ground will become darker at high temperature operating.

Note 3: If one of the above items is exceeded its maximum limitation momentarily, the quality of the product may be degraded. Absolute maximum limitation, therefore, specify the values exceeding which the product may be physically damaged. Be sure to use the product within the recommend range.

## 5. DC Characteristics

| Item | Symbol | Min. | Typ. | Max. | Unit |
|---|---|---|---|---|---|
| Analog Supply Voltage | VCC | 2.5 | 2.8 | 3.3 | V |
| Logic Supply Voltage | IOVCC | 1.65 | 2.8 | 3.3 | V |
| Input high voltage | $V_{IN}$ | 0.7*IOVCC | - | IOVCC | V |
| Input low voltage | $V_{IL}$ | GND | - | 0.3*IOVCC | V |
| Output high voltage | $V_{OH}$ | 0.8*IOVCC | - | IOVCC | V |
| Output low voltage | $V_{OL}$ | GND | - | 0.2*IOVCC | V |
| Input Current | $I_{IN}$ | - | 20 | - | mA |

## 6. Backlight Characteristic

| Item | Symbol | Min. | Typ. | Max. | Unit | Condition |
|---|---|---|---|---|---|---|
| Forward Voltage | $V_F$ | - | 3.0 | - | V | - |
| Forward Current | $I_F$ | - | 20 | - | mA | - |
| Power dissipation | Pd | - | 60 | - | mW | - |
| LED Life Time(25 ºC) | - | - | 10000 | - | Hrs | - |

Note: LED life time defined as follows: The final brightness is at 50% of original brightness.Typical operating life time is estimated data.

## 7. Pins Definitions.

| Pin.No | Symbol | Description |
|---|---|---|
| 1 | GND | Ground |
| 2 | VDD | Power supply for Analog |
| 3 | SCL | Serial clock pin. |
| 4 | SDA | SPI interface input/output pin |
| 5 | RES | LCM Reset pin |
| 6 | D/C | Register select pin. |
| 7 | CS | Chip select pin (“Low” enable) |
| 8 | BL | Backlit |

Note: The backlight LED is recommended to be powered independently by constant current drive.

## 8. Schematic Diagram

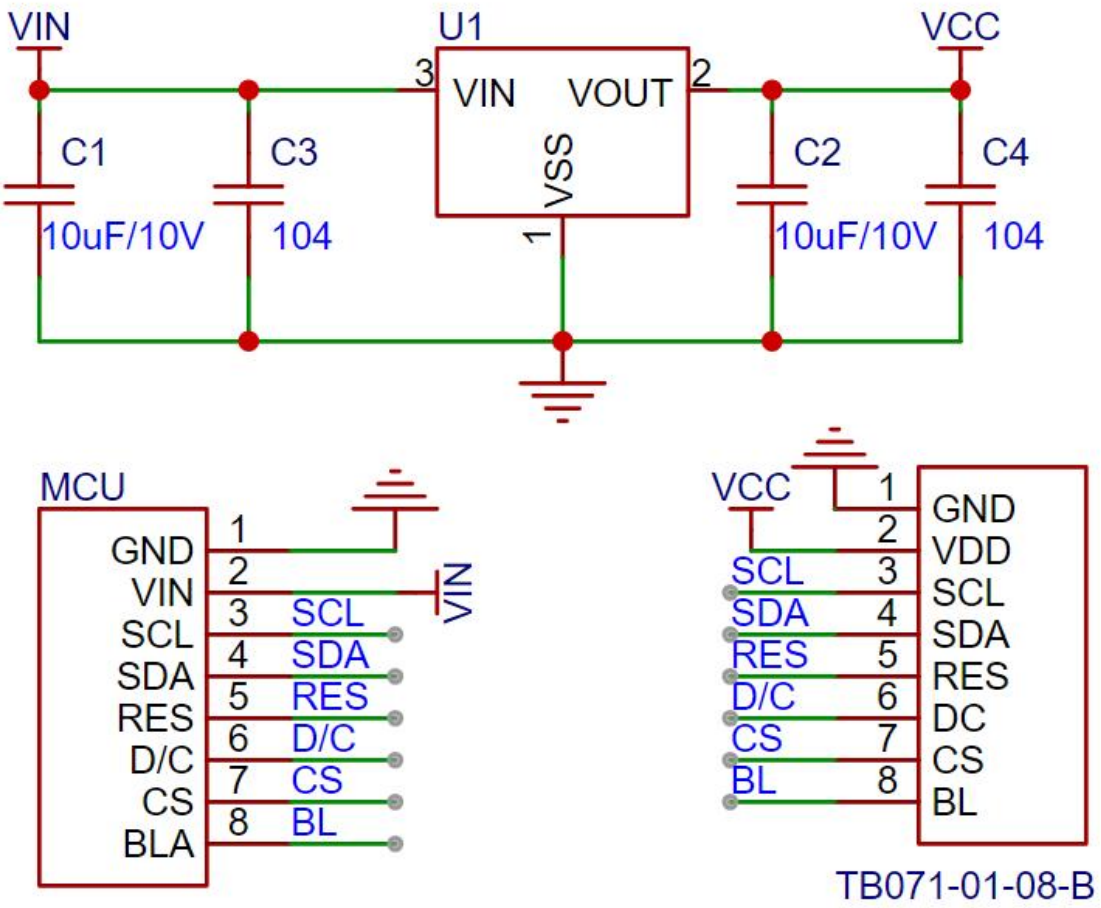


4SPI 参考原理图

## 9. Timing Characteristics

### Display Serial Interface Timing Characteristics (4-line SPI system)

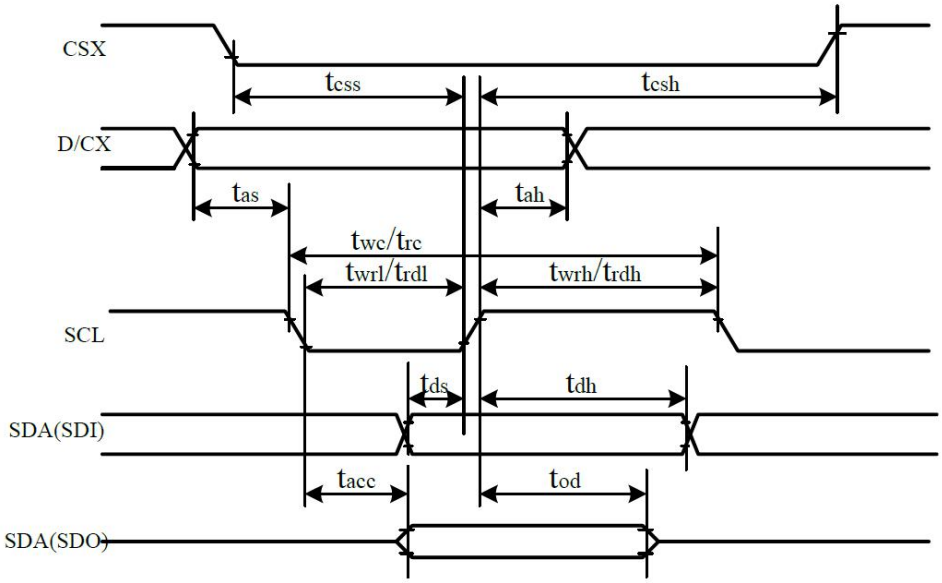


| Signal | Symbol | Parameter | min | max | Unit | Description |
|---|---|---|---|---|---|---|
| CSX | tcss | Chip select time (Write) | 20 | - | ns | |
| | tcsh | Chip select hold time (Read) | 40 | - | ns | |
| SCL | twc | Serial Clock Cycle (Write) | 10 | - | ns | |
| | twrh | SCL "H" Pulse Width (Write) | 5 | - | ns | |
| | twrl | SCL "L" Pulse Width (Write) | 5 | - | ns | |
| | trc | Serial Clock Cycle (Read) | 150 | - | ns | |
| | trdh | SCL "H" Pulse Width (Read) | 60 | - | ns | |
| | trdl | SCL "L" Pulse Width (Read) | 60 | - | ns | |
| D/CX | tas | D/CX setup time | 10 | - | ns | |
| | tah | D/CX hold time (Write/Read) | 10 | - | ns | |
| SDA/SDI (Input) | tds | Data setup time (Write) | 5 | - | ns | |
| | tdh | Data hold time (Write) | 5 | - | ns | |
| SDA/SD0 (Output) | tacc | Access time (Read) | 10 | - | ns | |

*Note: Ta = 25 °C, IOVCC=1.65V to 3.3V, VCI=2.5V to 3.3V, AGND=VSS=0V*

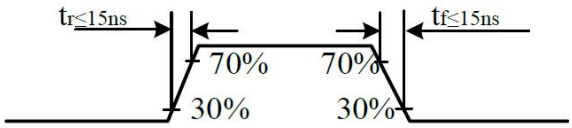

## 10. Optical Characteristics

| Item | Symbol | Measuring Conditions | | Min. | Typ. | Max. | Unit | Remark |
|---|---|---|---|---|---|---|---|---|
| Response Time | Tr+Tf | $\theta = 0^o$ $\phi = 0^o$ | 25 °C | - | 30 | 35 | ms | |
| Viewing Angle | θ | $\phi = 0^o$ | 25 °C | - | 80 | - | Deg | Note (b) |
| | | $\phi = 180^o$ | 25 °C | - | 80 | - | | |
| | θ | $\phi = 90^o$ | 25 °C | - | 80 | - | | |
| | | $\phi = 270^o$ | 25 °C | - | 80 | - | | |
| Contrast Ratio | CR | - | 25 °C | 800 | 1200 | - | - | Note (c) |
| Color of CIE Coordinate(LCD) | White | X | 25 °C | 0.300 | 0.302 | 0.304 | - | - |
| | | Y | 25 °C | 0.323 | 0.325 | 0.327 | | |
| | Red | X | 25 °C | 0.622 | 0.624 | 0.626 | | |
| | | Y | 25 °C | 0.327 | 0.329 | 0.331 | | |
| | Green | X | 25 °C | 0.286 | 0.288 | 0.290 | | |
| | | Y | 25 °C | 0.520 | 0.522 | 0.524 | | |
| | Blue | X | 25 °C | 0.134 | 0.136 | 0.138 | | |
| | | Y | 25 °C | 0.135 | 0.137 | 0.139 | | |
| Transmittance (with polarizer) | -- | -- | - | 3.5 | 4.5 | - | % | - |

Note1:Definition of Response Time.(white-black)

The response time is defined as the time interval between the 10% and 90% amplitudes

# 11. Reliability

## 11.1. MTBF

The LCD module shall be designed to meet a minimum MTBF value of 50000 hours with normal.

## 11.2. Test Condition

| No | Item | Condition | Criteria |
|---|---|---|---|
| 1 | High Temperature Operating | 70℃*24Hrs | 1. No Defect Of Operational Function In Room Temperature Are Allowable.<br><br>2. IDD of LCM in Pre-and Post-Test Should Follow Specification. |
| 2 | Low Temperature Operating | -20℃*24Hrs | |
| 3 | High Humidity Storage | 50℃*90%RH*24Hrs | |
| 4 | High Temperature Storage | 80℃*24Hrs | |
| 5 | Low Temperature Storage | -30℃*24Hrs | |
| 6 | Thermal Cycling Test Storage | - | |
| 7 | Packing vibration | - | |
| 8 | Electrical Static Discharge | - | |
| | | - | |
| 9 | Drop Test (Packaged) | - | |

Note1. The test samples should be applied to only one test item.

Note2. Sample size for each test item is 2pcs.

Note3. No defection function allowable.

# 12. Precautions

## 12.1. Storage Conditions

12.1.1. Store the panel or module in a dark place where the temperature is 23±5℃and the humidity is below 45±20%RH.

12.1.2. Store in anti-static electricity container.

12.1.3. Store in clean environment, free from dust, active gas, and solvent.

12.1.4. Do not place the module near organics solvents or corrosive gases.

12.1.5. Do not crush, shake, or jolt the module.

12.1.6. Strong light exposure causes degradation of polarizer and color filter.

## 12.2. Handling Precautions

12.2.1. Avoid static electricity, which can damage the CMOS LSI.

12.2.2. The polarizing plate of the display is very fragile, please handle if very carefully.

12.2.3. Do not give external shock.

12.2.4. Do not apply excessive force on the surface.

12.2.5. Do not wipe the polarizer with dry cloth, as it might cause scratch. If the surface of the LCD needs to be cleaned, wipe it swiftly with cotton or other soft cloth soaked with petroleum IPA, do not use other chemicals.

12.2.6. Reverse and use within ratings in order to keep performance and prevent damage

12.2.7. Do not remove the panel or frame from the module.

12.2.8. Except for soldering the interface, do not make any alterations or modifications with a soldering iron; Ensure welding temperature at 320 ° C to 350 ° C, the welding timecontrol within the 10 s, welding note don't stay too long in the same place to avoid scald FPC.

## 12.3. Limited Warranty

12.3.1. Our warranty liability is limited to repair and/or replacement. We will not be responsible for any consequential loss. (我们的保证责任仅限于修理和/或更换。我们将不负责任何相应的损失。)

12.3.2. If possible, we suggest customer to use up all modules in six months. If the module storage time over twelve months, we suggest that recheck it before the module be used. (如果可能，我们建议客户在6个月内用完所有模块。如果模块存放时间超过12个月，我们建议在使用模块前重新检查。)

12.3.3. The warranty period is twelve months from the date of delivery. Buyer shall complete the assembly of all processes within twelve months of validity. During the warranty period, if the product quality problems, our company will be responsible for repair and replacement. All products must be stored and handled in accordance with regulations. Under warranty. When the goods do not comply with the above terms, we do not provide warranty services.（保修期为交货之日起十二个月。买方应在12个月内完成所有流程的组装。在保修期内，如果产品出现质量问题，我公司将负责维修和更换。所有产品必须按照规定储存和处理。在保修期内。当货物不符合上述条款时，我们不提供保修服务。）