TFT LCD MODULE

1.12 inch 50RGB*160DOTS

MODULE NUMBER:T112XB-C08-05

REVISION: A

Customer:
Approved by

From: GoldenMorning Electronics Co., Ltd.
Approved by

Notes:

1. Please contact GoldenMorning Electronics Co., Ltd. before assigning your product based on this module specification
2. The information contained herein is presented merely to indicate the characteristics and performance of our products. No responsibility is assumed by GoldenMorning Electronics Co., Ltd. for any intellectual property claims or other problems that may result from application based on the module described herein.

Revised History

Part Number	Revision	Revision Content	Revised on
T112XB-C08-05	A	New	20240505

Contents

Revision History
Contents
1. General Description
2. Mechanical Drawing
3. Pin Description
4. Electrical Characteristics
5. Optical characteristics
6. Reliability
7. Package Specifications
8.Precautions When Using These TFT Display Modules
9. Warranty
10. Notice

1. General Description

1.1 Description

T112XB-C08-05 is a 50RGBX160 dot-matrix TFT LCD module. This module is composed of a TFT LCD Panel, driver ICs, FPC and a Backlight unit.

1.2 Features

NO.	Item	Contents	Unit
1	LCD Size	1.12 inch(Diagonal)	-
2	Display Mode	Normally BLACK	-
3	Resolution	50(H)RGB x 160(V)	-
4	Dot pitch	0.2184 (W) x 0.2184(H) mm	-
5	Active area	8.49(H) x 27.17(V) mm	-
6	Module size	10.8(H) x 32.18(V) x2.11(D) mm	-
7	Color arrangement	RGB Vtertical stripe	-
8	Interface	4 Line SPI	-
9	Drive IC	GC9D01	-
10	Luminance(cd/m2)	350 (TYP)	
11	Viewing Direction	ALL View	
12	Backlight	1 White LED	
13	Operating Temp.	□□□M	℃
14	Storage Temp.	□□□M	℃
15	Weight	1.1	g

2. Mechanical Drawing

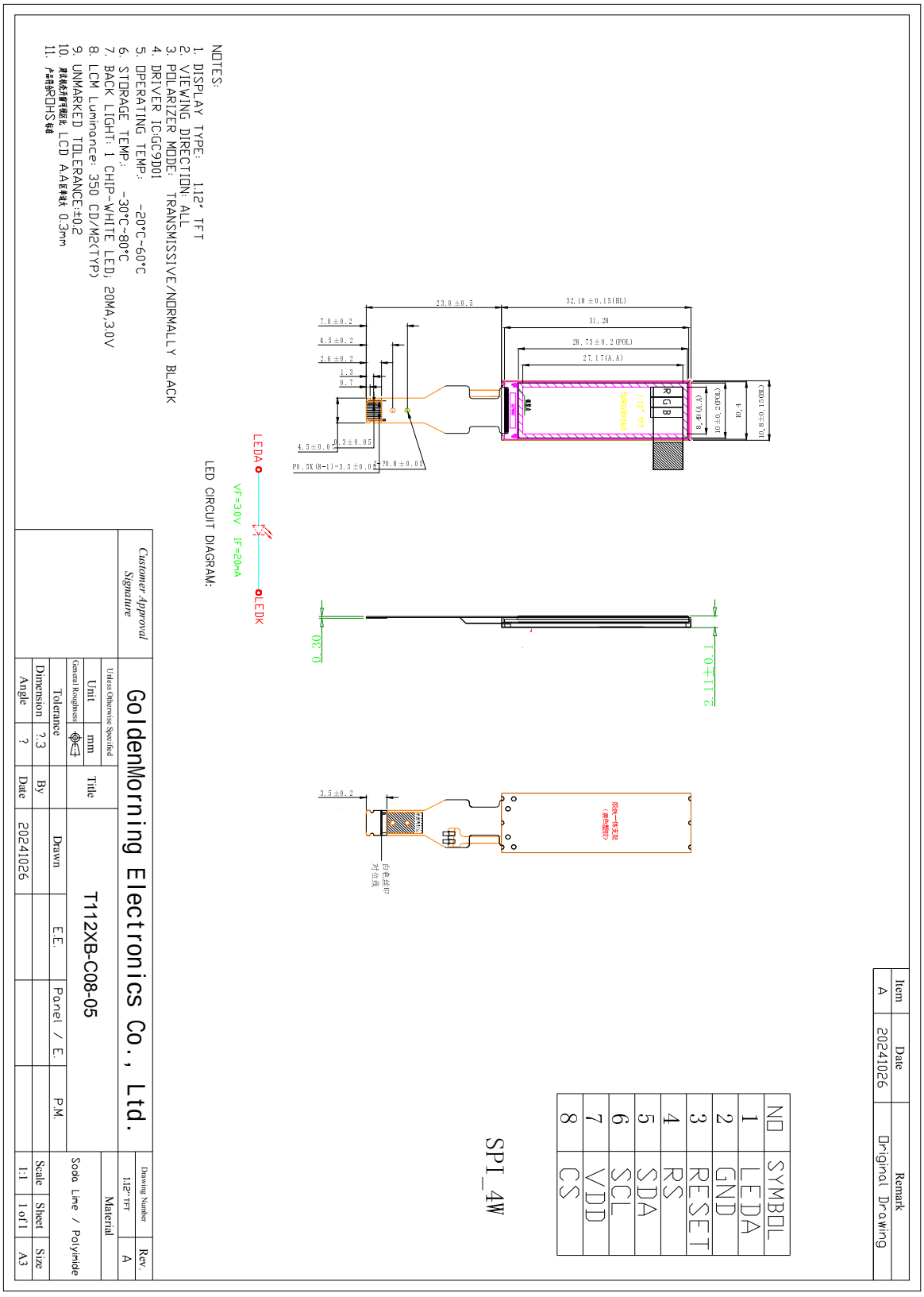

3. Pin Definition

FPC Connector is used for the module electronics interface.

NO.	Symbol	Description
1	LEDA	LED Anode
2	GND	Power Ground.
3	RESET	This signal will reset the device,Signal is active low.
4	RS	Display data/command selection pin in 4-line serial interface.
5	SDA	SPI interface input/outpur pin.
6	SCL	This pin is used to be serial interface clock.
7	VDD	Power Supply for Analog
8	CS	Chip selection pin,Low enable,High disable.

Note:

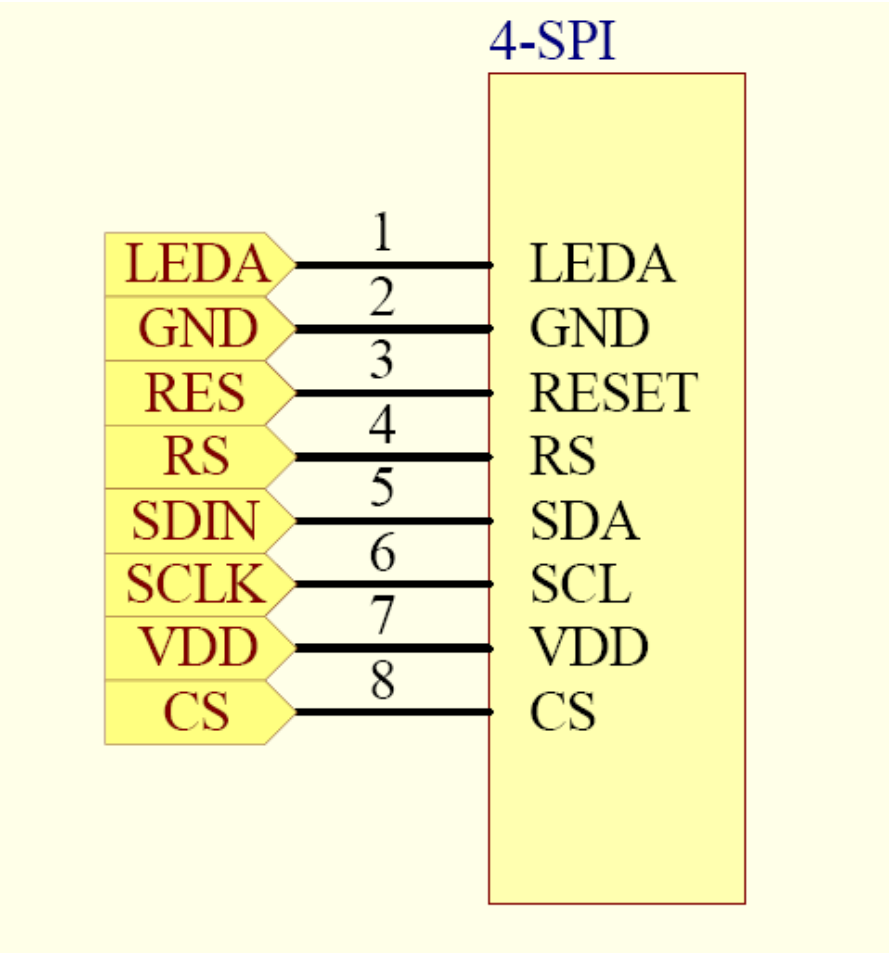

4. Electrical Characteristics

4.1 Absolute Maximum Ratings

Parameter	Symbol	Min	Max	Unit	Notes
Supply Voltage (I/O)	VDD	-0.3	4.6	V	
Analog Supply Voltage	VDDIO	-0.3	4.6	V	
Logic Input Voltage	VIN	-0.3	VDD+0.3	V	
Operation Temperature	Top	-20	70	℃	
Storage Temperature	Tst	-30	80	℃	

4.2 Model Characteristics

Parameter	Symbol	Min	TYP	MAX	Unit	Notes
Voltage for LED backlight	V_{bL}	2.9	3.0	3.1	V	
Supply Voltage for Logic	VDD	2.5	2.8	3.3	V	
Interface Operation Voltage	VDDIO	1.65	1.8	3.3	V	
Gate Driver High Voltage	VGH	10	-	15	*V*	
Gate *Driver Low* Voltage	VGL	-13	-	-7.5	V	
Operating Current for V_{DD}	I_{DD}	--	2	3	mA	
Current for LED backlight	I_{bL}	15	20	25	mA	1 LED
Brightness	L_{br}	300	350	--	cd/m^2	
Sleep In Mode VDD	I_{dd}	--	15	30	uA	
Sleep In Mode VDDIO	I_{ddio}	--	5	10	uA	

1 Test condition is:
a:Center point on active area
b:Best Contrast
2 Uniform measure condition:
a:Measure 9 point,Measure location is show below:
b:Uniform=(Min brightness/Max.brightness)x100%
c:Best Contrast.

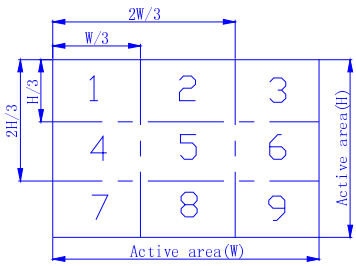

5. Optical characteristics

Item	Symbol	Measuring Conditions		Min.	Typ.	Max.	Unit	Remark
Response Time	Tr+Tf	$\theta = 0^o$ $\phi = 0^o$	25 °C	-	30	40	ms	
Viewing Angle	θ	$\phi = 0^o$	25 °C	-	70	-	Deg	Note (b)
		$\phi = 180^o$	25 °C	-	70	-		
	θ	$\phi = 90^o$	25 °C	-	70	-		
		$\phi = 270^o$	25 °C	-	70	-		
Contrast Ratio	CR	-	25 °C	700	1000	-	-	Note (c)
Color of CIE Coordinate	White	X	25 °C				-	-
		Y	25 °C					
	Red	X	25 °C					
		Y	25 °C					
	Green	X	25 °C					
		Y	25 °C					
	Blue	X	25 °C					
		Y	25 °C					
Transmittance (with polarizer)					5.7		%	

Note1:Definition of Response Time (white-black)

The response time is defined as the time interval between the 10% and 90% amplitudes

6. Reliability

6.1 Contents of Reliability Tests

Item	Conditions	Criteria
High Temperature Operation	60°C, 120 hrs	The operational functions work.
Low Temperature Operation	-20°C, 120 hrs	
High Temperature Storage	80°C, 120 hrs	
Low Temperature Storage	-30°C, 120 hrs	
High Temperature/Humidity Operation	50°C, 85% RH, 120 hrs	
Temperature Cycling	-10°C ⇔ 25°C⇔ 60°C⇔25°C, 60mins/Cycle,12 Cycles	

Note:

No moisture condensation is observed during tests.

Condition of image sticking test : 25°C±2°C.

6.2 Shock and Vibration

Test Item	Conditions
Packing Vibration	Frequency range 10~50HZ,Stroke:1.0mm,sweep:10~50Hz, X,y,z 2 hours for each direction

6.3 ESD

Test Item	Conditions
ESD	150pF , 330Ω ,Contact: ±2KV,
	150pF , 330Ω , Air: ±4KV

7. Package Specifications

Item		Quantity	
Module		**840**	**per Primary Box**
Holding Trays	**(A)**	**15**	**per Primary Box**
Total Trays	**(B)**	**16**	**per Primary Box (Including 1 Empty Tray)**
Primary Box	**(C)**	**1~4**	**per Carton (4 as Major / Maximum)**

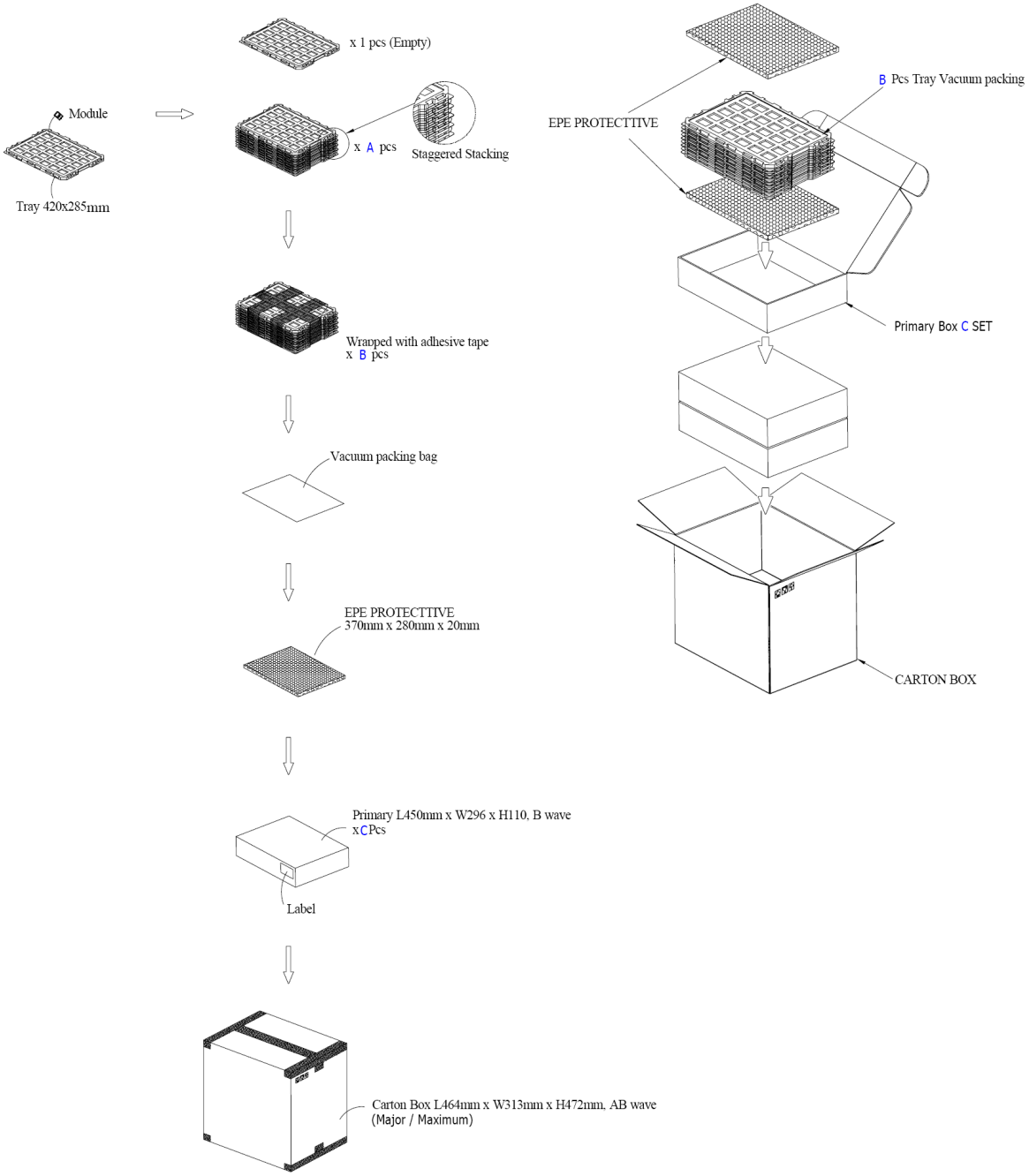

8. Precautions When Using These TFT Display Modules

8.1 Handling Precautions

1) Since the display panel is being made of glass, do not apply mechanical impacts such us dropping from a high position.
2) If the display panel is broken by some accident and the internal organic substance leaks out, be careful not to inhale nor lick the organic substance.
3) If pressure is applied to the display surface or its neighborhood of the TFT display module, the cell structure may be damaged and be careful not to apply pressure to these sections.
4) The polarizer covering the surface of the TFT display module is soft and easily scratched. Please be careful when handling the TFT display module.
5) When the surface of the polarizer of the TFT display module has soil, clean the surface. It takes advantage of by using following adhesion tape.
   * Scotch Mending Tape No. 810 or an equivalent
   Never try to breathe upon the soiled surface nor wipe the surface using cloth containing solvent such as ethyl alcohol, since the surface of the polarizer will become cloudy.
   Also, pay attention that the following liquid and solvent may spoil the polarizer:
   * Water
   * Ketone
   * Aromatic Solvents
6) Hold TFT display module very carefully when placing TFT display module into the system housing. Do not apply excessive stress or pressure to TFT display module. And, do not over bend the film with electrode pattern layouts. These stresses will influence the display performance. Also, secure sufficient rigidity for the outer cases.

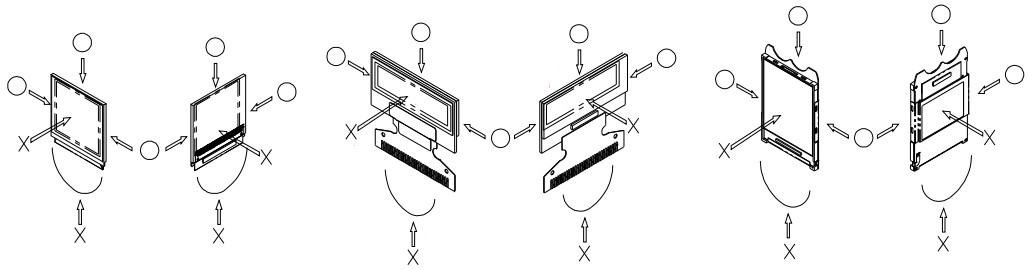

7) Do not apply stress to the driver IC and the surrounding molded sections.
8) Do not disassemble nor modify the TFT display module.
9) Do not apply input signals while the logic power is off.
10) Pay sufficient attention to the working environments when handing TFT display modules to prevent occurrence of element breakage accidents by static electricity.
    * Be sure to make human body grounding when handling TFT display modules.
    * Be sure to ground tools to use or assembly such as soldering irons.
    * To suppress generation of static electricity, avoid carrying out assembly work under dry environments.
    * Protective film is being applied to the surface of the display panel of the TFT display module. Be careful since static electricity may be generated when exfoliating the protective film.
11) Protection film is being applied to the surface of the display panel and removes the protection film before assembling it. At this time, if the TFT display module has been stored for a long period of time, residue adhesive material of the protection film may remain on the surface of the display panel after removed of the film. In such case, remove the residue material by the method introduced in the above Section 5).
12) If electric current is applied when the TFT display module is being dewed or when it is placed under high humidity environments, the electrodes may be corroded and be careful to avoid the above.

8.2 Storage Precautions

1) When storing TFT display modules, put them in static electricity preventive bags avoiding exposure to direct sun light nor to lights of fluorescent lamps. and, also, avoiding high temperature and high humidity environment or low temperature (less than 0°C) environments. (We recommend you to store these modules in the packaged state when they were shipped from GoldenMorning Electronics

Co.,Ltd.
At that time, be careful not to let water drops adhere to the packages or bags nor let dewing occur with them.

2) If electric current is applied when water drops are adhering to the surface of the TFT display module, when the TFT display module is being dewed or when it is placed under high humidity environments, the electrodes may be corroded and be careful about the above.

8.3 Designing Precautions

1) The absolute maximum ratings are the ratings which cannot be exceeded for TFT display module, and if these values are exceeded, panel damage may be happen.
2) To prevent occurrence of malfunctioning by noise, pay attention to satisfy the V_{IL} and V_{IH} specifications and, at the same time, to make the signal line cable as short as possible.
3) We recommend you to install excess current preventive unit (fuses, etc.) to the power circuit (V_{DD}). (Recommend value: 0.5A)
4) Pay sufficient attention to avoid occurrence of mutual noise interference with the neighboring devices.
5) As for EMI, take necessary measures on the equipment side basically.
6) When fastening the TFT display module, fasten the external plastic housing section.
7) If power supply to the TFT display module is forcibly shut down by such errors as taking out the main battery while the TFT display panel is in operation, we cannot guarantee the quality of this OEL display module.
8) The electric potential to be connected to the rear face of the IC chip should be as follows:
   * Connection (contact) to any other potential than the above may lead to rupture of the IC.

8.4 Precautions when disposing of the TFT display modules

1) Request the qualified companies to handle industrial wastes when disposing of the TFT display modules. Or, when burning them, be sure to observe the environmental and hygienic laws and regulations.

8.5 Other Precautions

1) When an TFT display module is operated for a long of time with fixed pattern may remain as an after image or slight contrast deviation may occur.
   Nonetheless, if the operation is interrupted and left unused for a while, normal state can be restored. Also, there will be no problem in the reliability of the module.
2) To protect TFT display modules from performance drops by static electricity rapture, etc., do not touch the following sections whenever possible while handling the TFT display modules.
   * Pins and electrodes
   * Pattern layouts such as the FPC
3) With this TFT display module, the TFT driver is being exposed. Generally speaking, semiconductor elements change their characteristics when light is radiated according to the principle of the solar battery. Consequently, if this TFT driver is exposed to light, malfunctioning may occur.
   * Design the product and installation method so that the TFT driver may be shielded from light in actual usage.
   * Design the product and installation method so that the TFT driver may be shielded from light during the inspection processes.
4) Although this TFT display module stores the operation state data by the commands and the indication data, when excessive external noise, etc. enters into the module, the internal status may be changed. It therefore is necessary to take appropriate measures to suppress noise generation or to protect from influences of noise on the system design.
5) We recommend you to construct its software to make periodical refreshment of the operation statuses (re-setting of the commands and re-transference of the display data) to cope with catastrophic noise.

9.Warranty:

The warranty period shall last twelve (12) months from the date of delivery. Buyer shall be completed to assemble all the processes within the effective twelve (12) months. GoldenMorning Electronics Co., Ltd. shall be liable for replacing any products which contain defective material or process which do not conform to the product specification, applicable drawings and specifications during the warranty period. All products must be preserved, handled and appearance to permit efficient handling during warranty period. The warranty coverage would be exclusive while the returned goods are out of the terms above.

10.Notice:

No part of this material may be reproduces or duplicated in any form or by any means without the written permission of GoldenMorning Electronics Co., Ltd. reserves the right to make changes to this material without notice. GoldenMorning Electronics Co., Ltd. does not assume any liability of any kind arising out of any inaccuracies contained in this material or due to its application or use in any product or circuit and, further, there is no representation that this material is applicable to products requiring high level reliability, such as, medical products. Moreover, no license to any intellectual property rights is granted by implication or otherwise, and there is no representation or warranty that anything made in accordance with this material will be free from any patent or copyright infringement of a third party. This material or portions thereof may contain technology or the subject relating to strategic products under the control of Foreign Exchange and Foreign Trade Law of Taiwan and may require an export license from the Ministry of International Trade and Industry or other approval from another government agency.